Assembly Guide

Lingo round, Steel top shelf w. reinforcement

WE ARE LIBRARY PEOPLE®

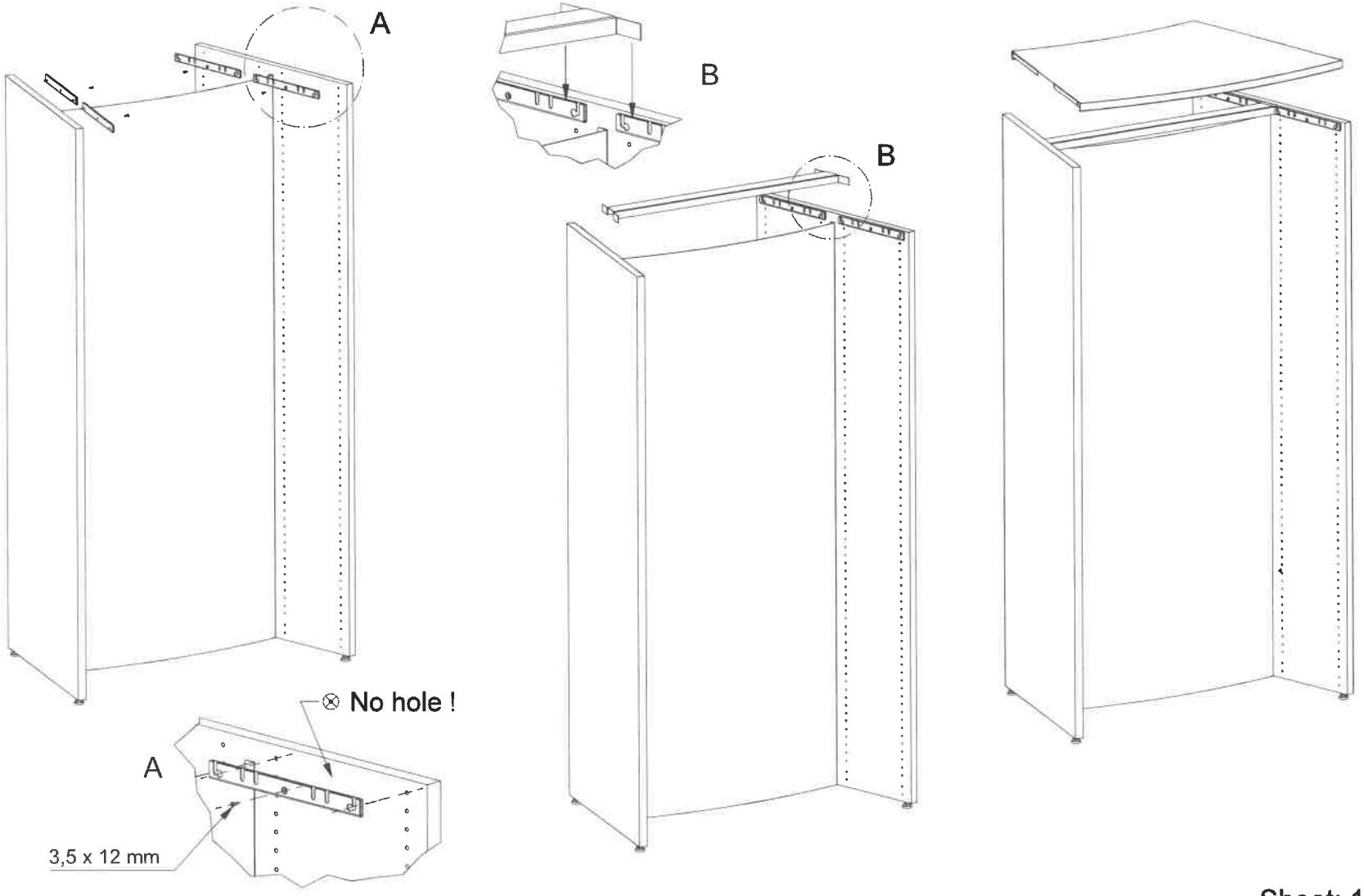

Sheet: 1 / 1

Assembly Guide

Lingo round, Bracket f/ steel shelf

WE ARE LIBRARY PEOPLE®

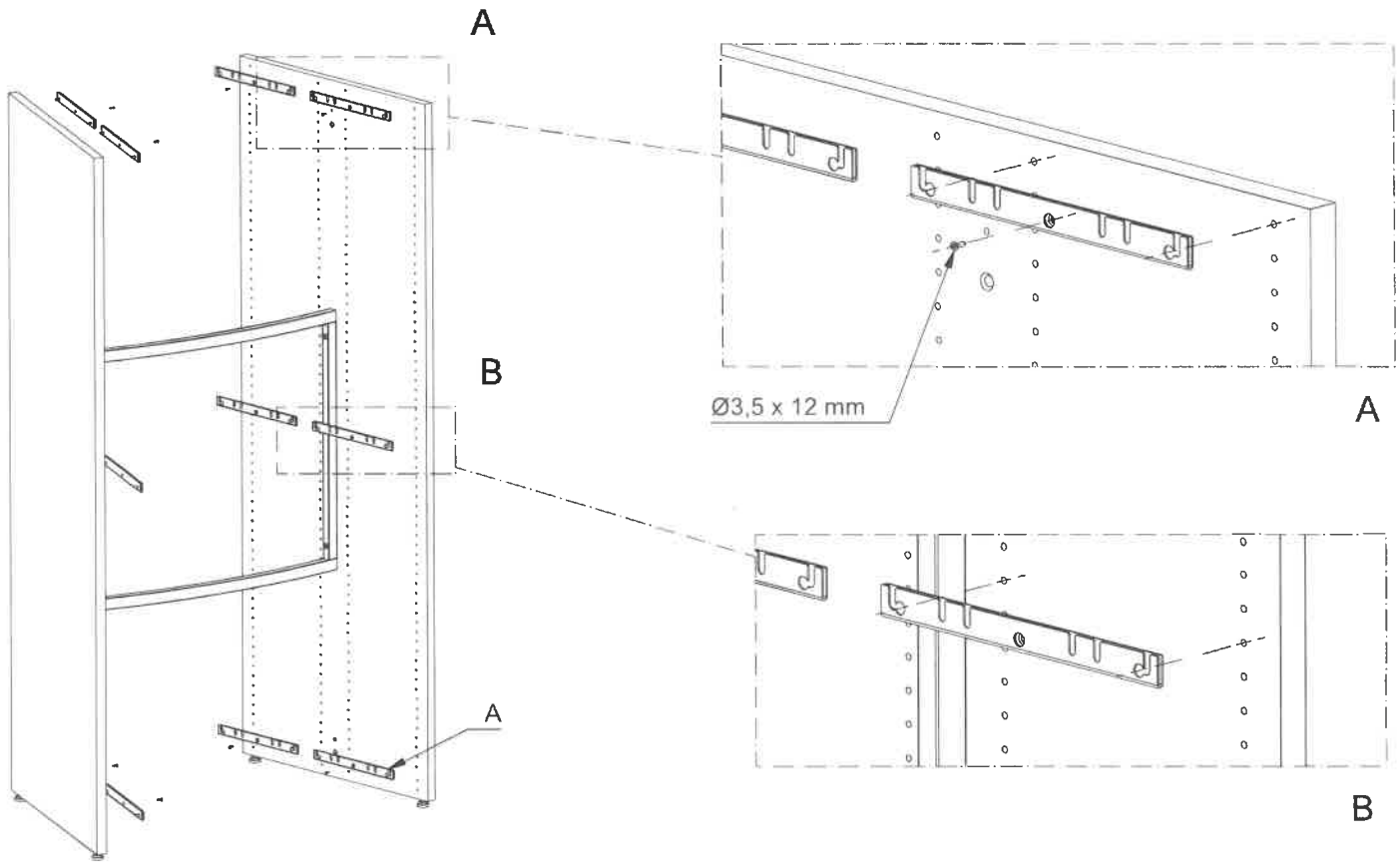

Sheet: 1 / 2

Assembly Guide

Lingo round, Bracket f/ steel shelf

WE ARE LIBRARY PEOPLE®

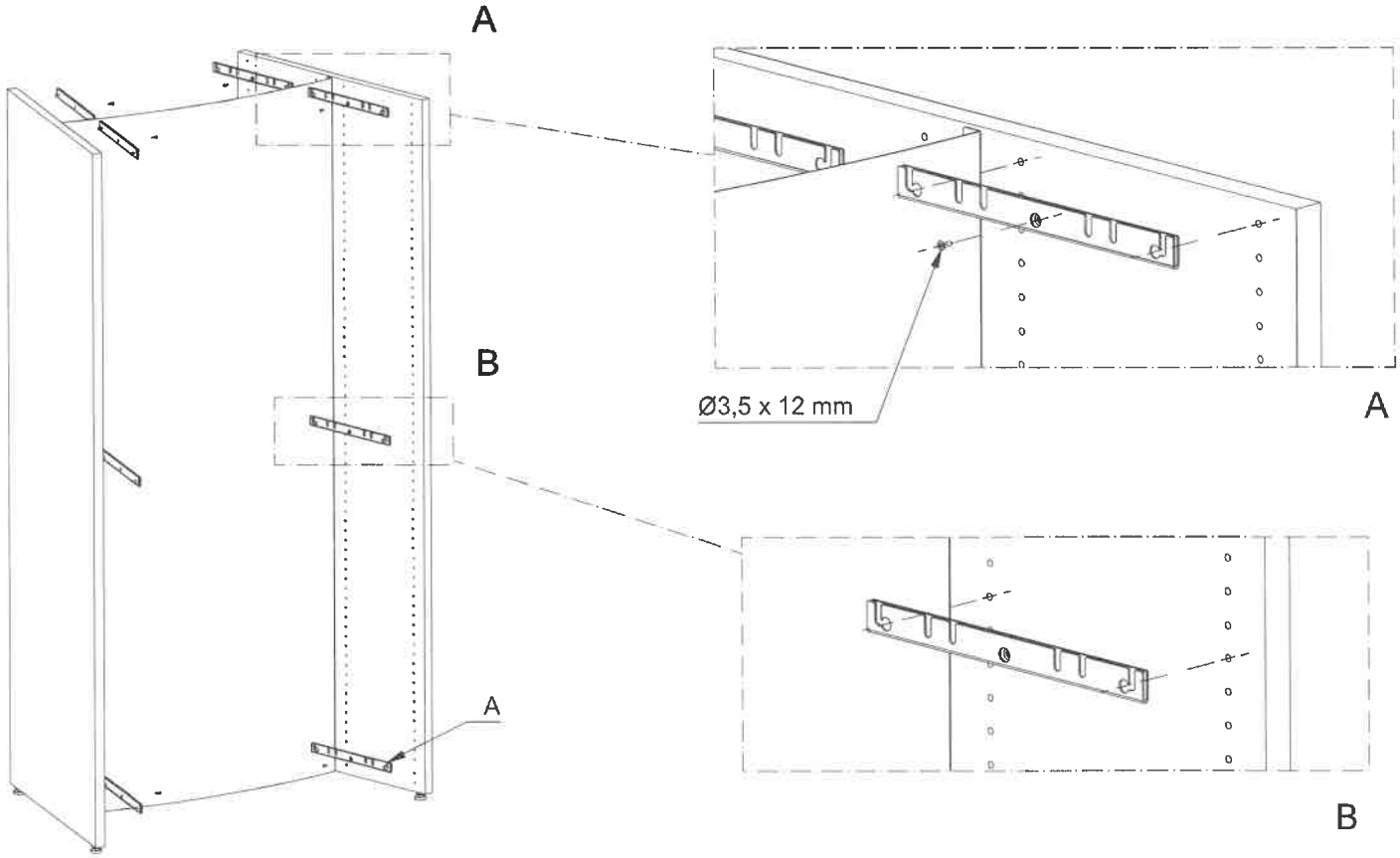

Sheet: 2 / 2

Assembly Guide

Lingo round, Wooden shelves with/without backedge

WE ARE LIBRARY PEOPLE®

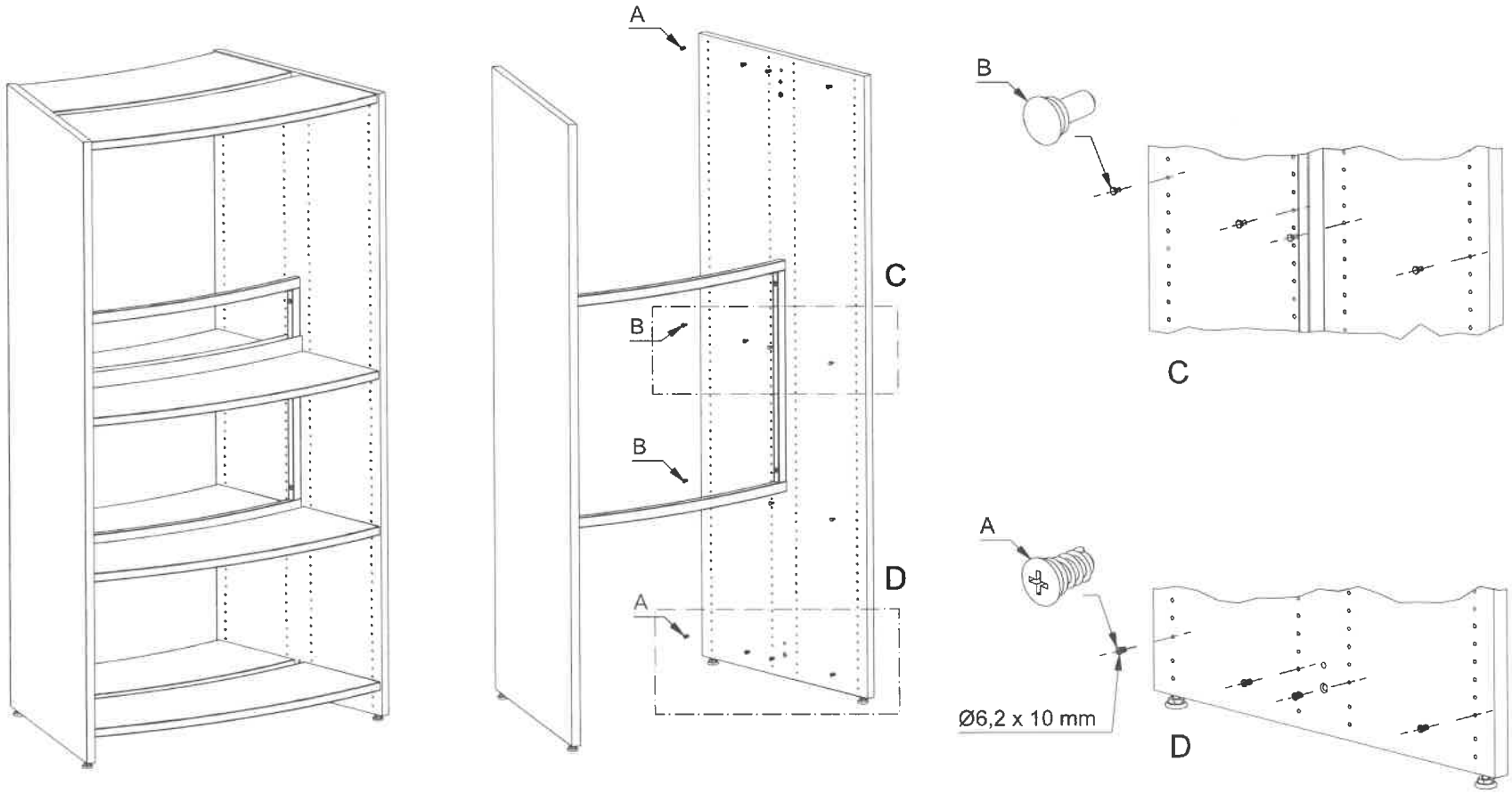

Sheet: 1 / 2

Assembly Guide

Lingo round, Wooden shelves with/without backedge

WE ARE LIBRARY PEOPLE®

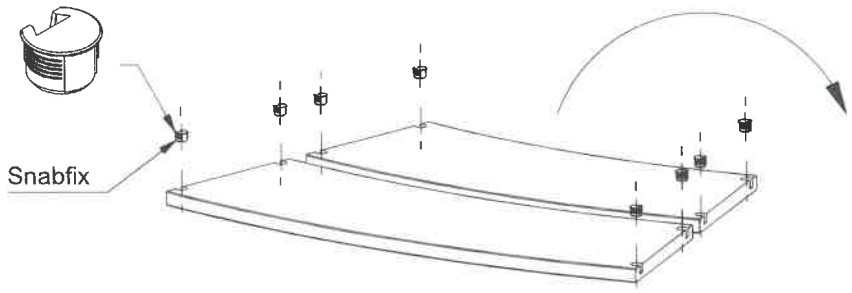

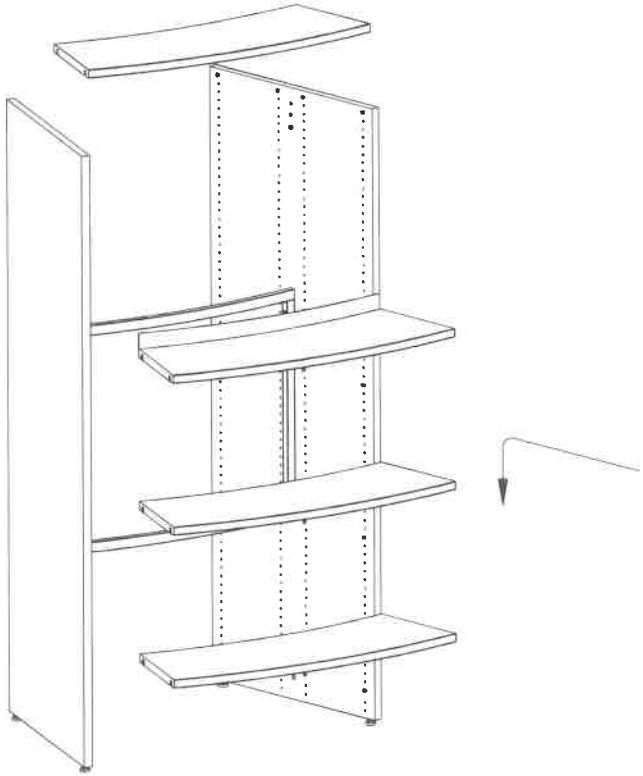

Round shape of the steel backedge appears during assembly

Sheet: 2 / 2

Assembly Guide

Lingo round, castor frame with hidden castors and steel plinth

WE ARE LIBRARY PEOPLE®

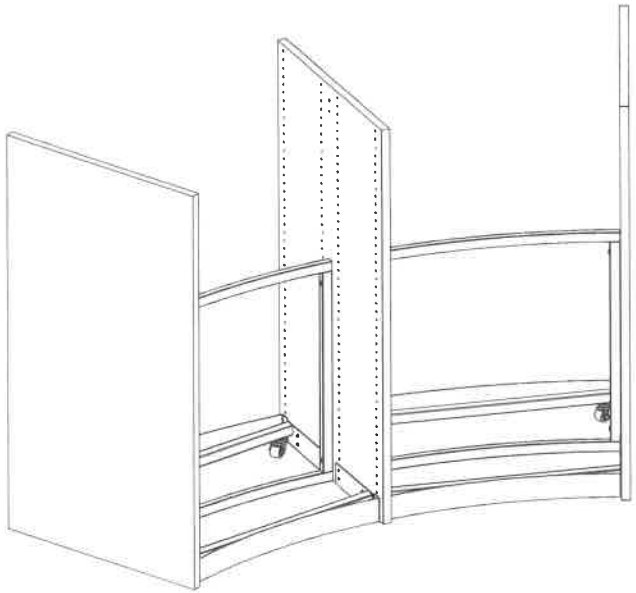

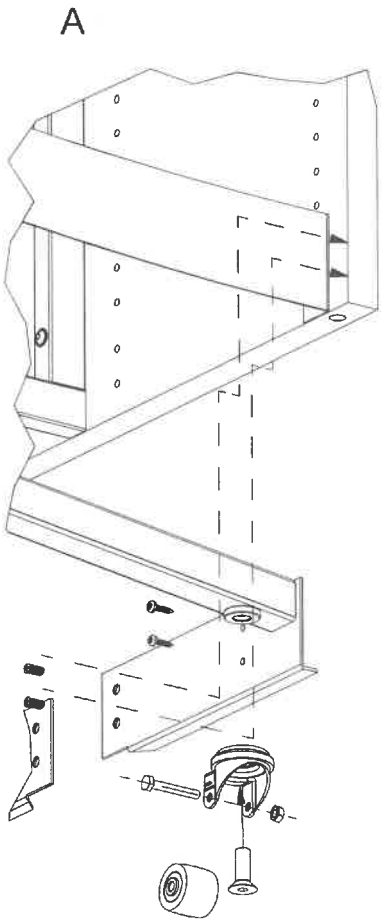

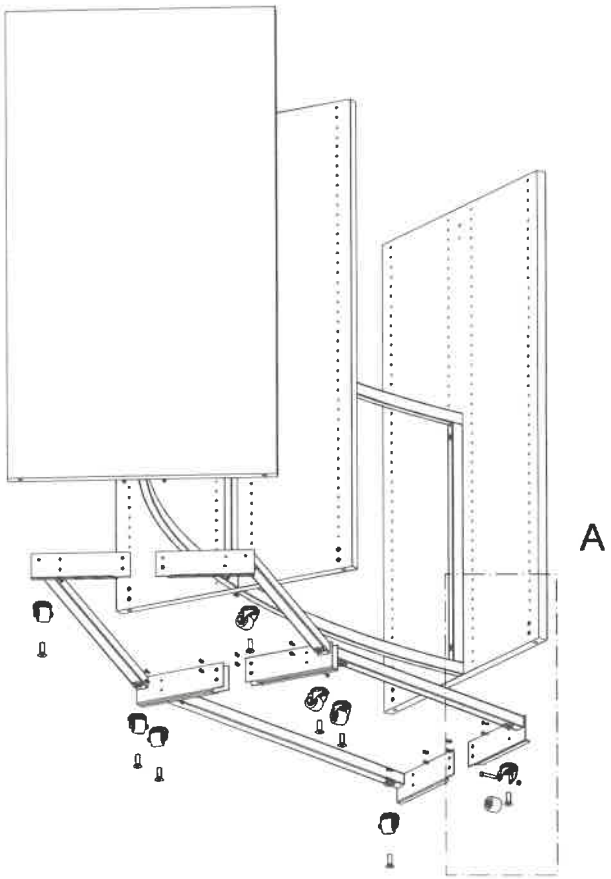

Sheet: 1 / 2

Assembly Guide

Lingo round, castor frame with hidden castors and steel plinth

WE ARE LIBRARY PEOPLE®

B

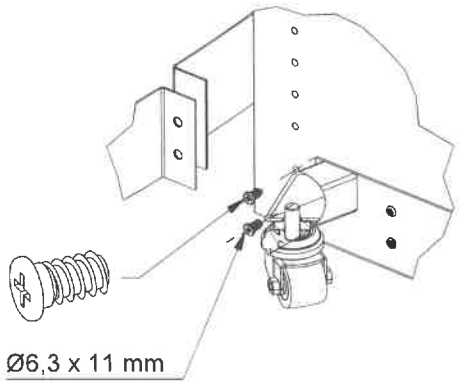

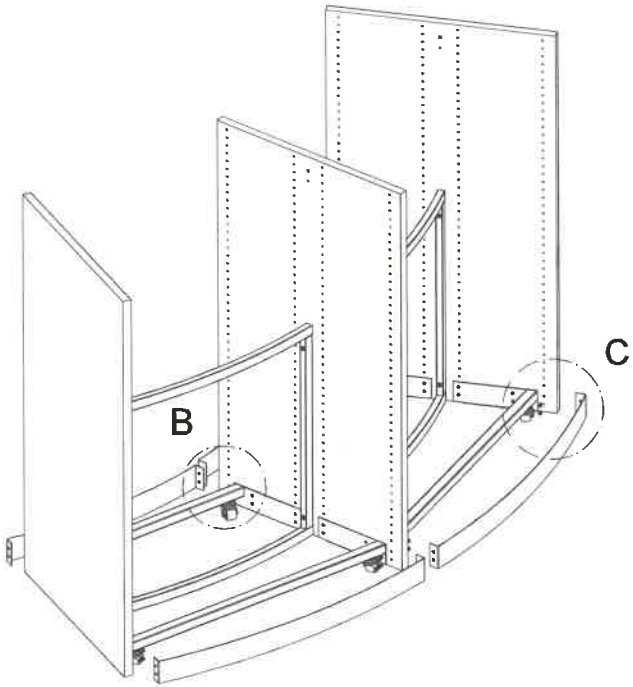

C

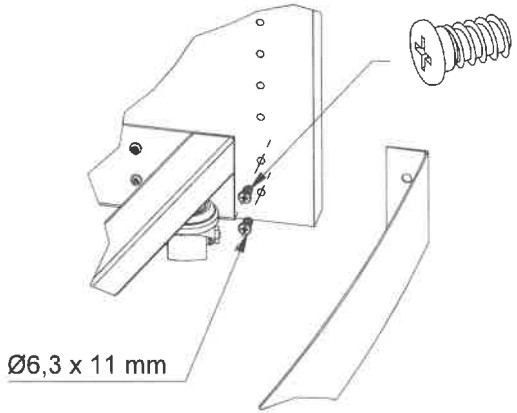

Round shape of the steel plinth appears during assembly

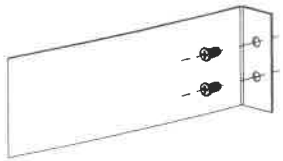

Sheet: 2 / 2

Assembly Guide

Lingo round, castor frame with visible castors

WE ARE LIBRARY PEOPLE ®

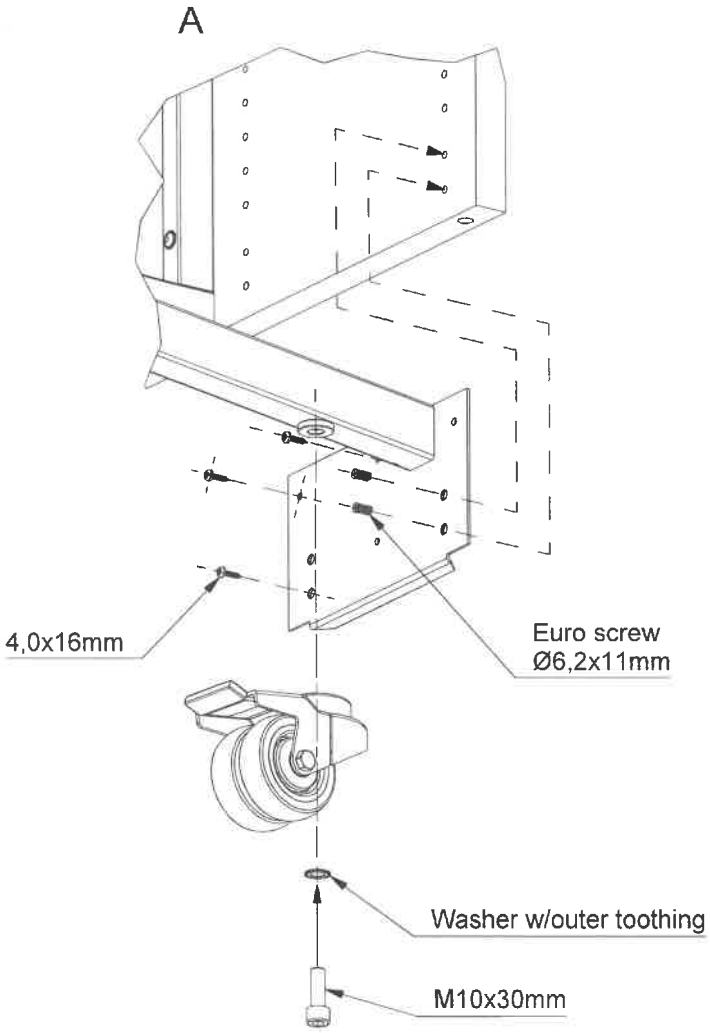

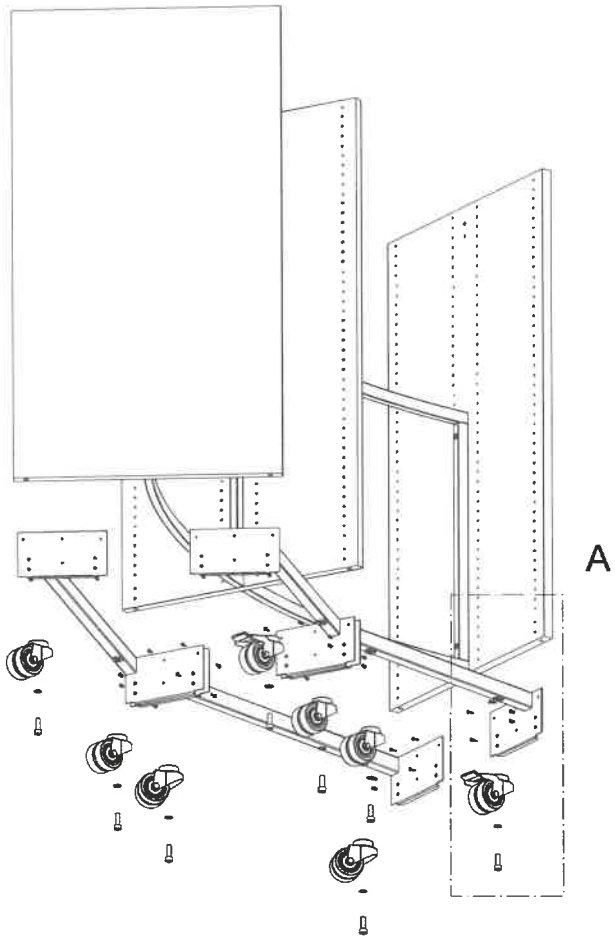

Sheet: 1 / 1

Assembly Guide

Lingo round, double-sided wooden castor plate

WE ARE LIBRARY PEOPLE ®

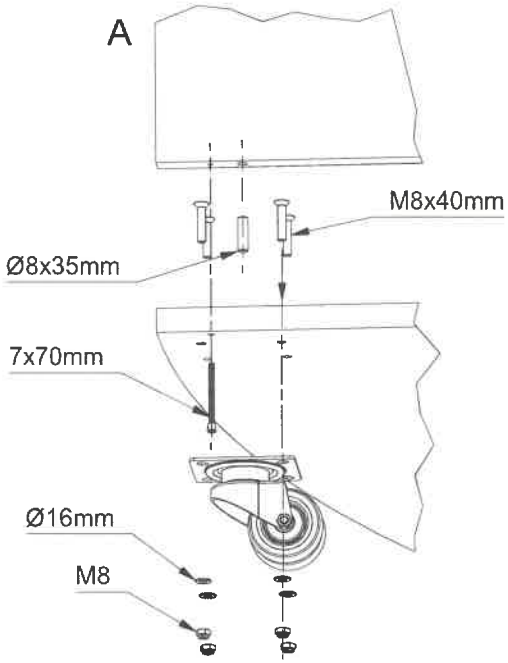

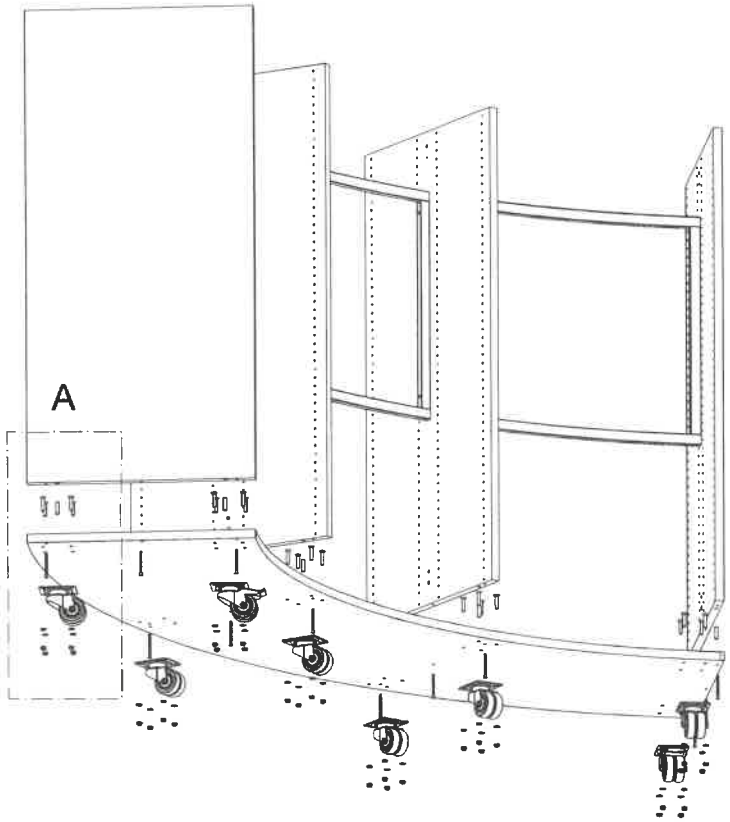

Sheet: 1 / 1

Assembly Guide

Lingo round, Wooden top shelves

WE ARE LIBRARY PEOPLE®

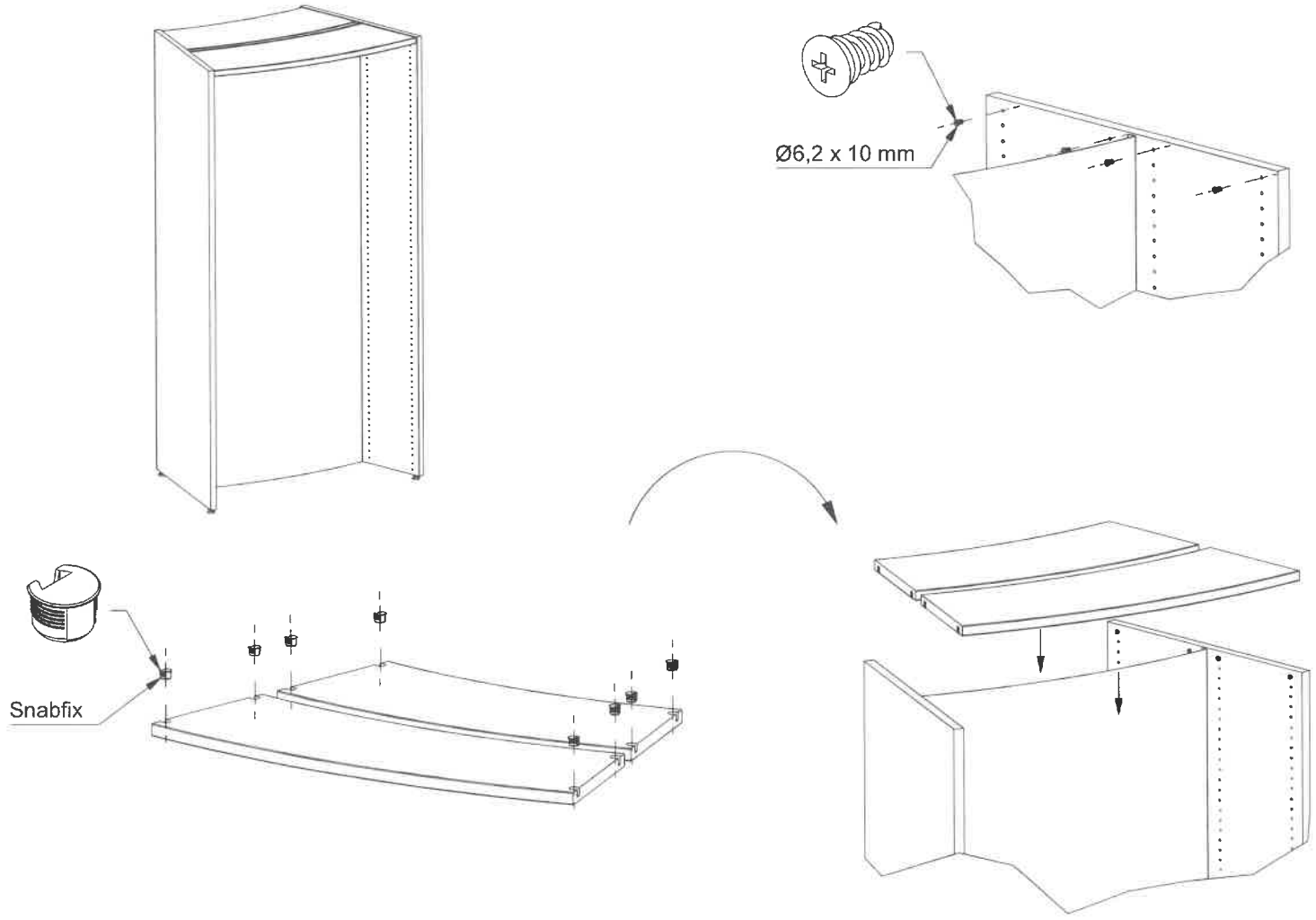

Sheet: 1 / 2

Assembly Guide

Lingo round, Wooden top shelves

WE ARE LIBRARY PEOPLE®

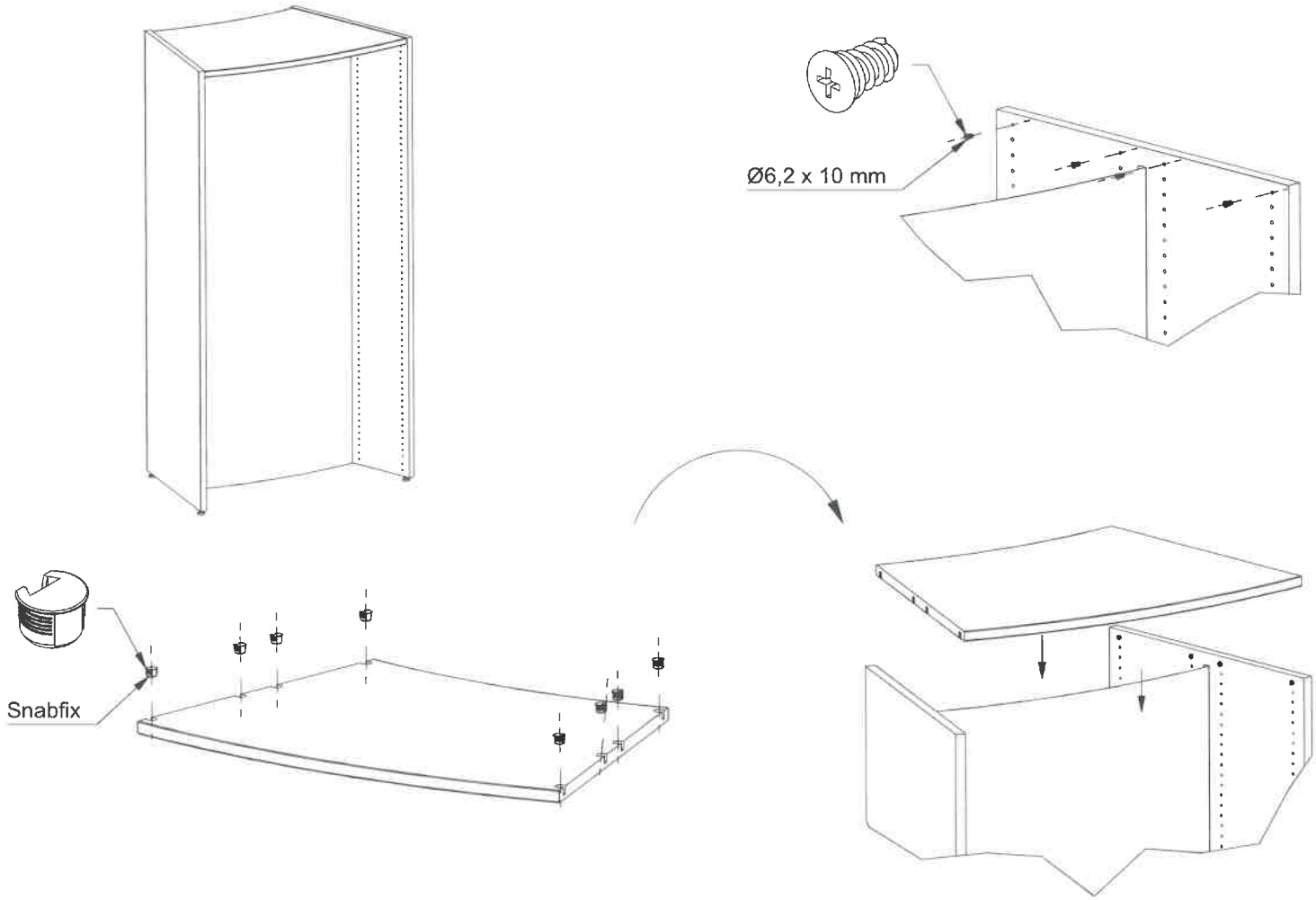

Sheet: 2 / 2

Assembly Guide

Lingo round, overlying top plate

WE ARE LIBRARY PEOPLE®

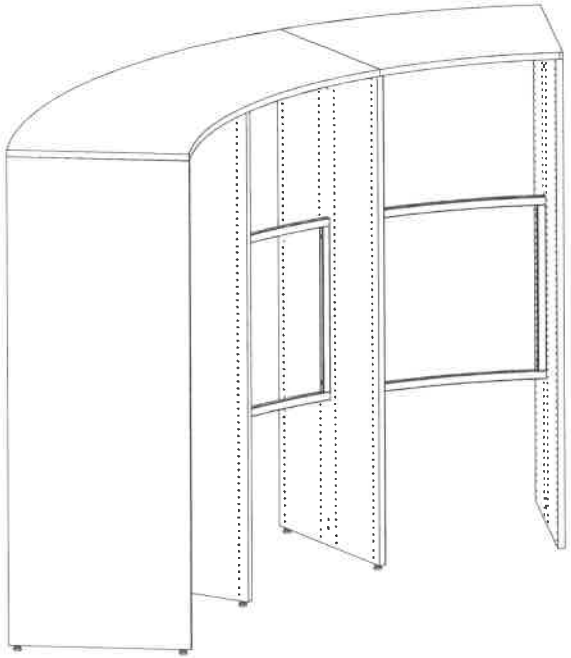

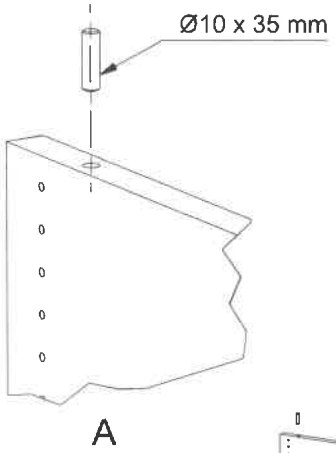

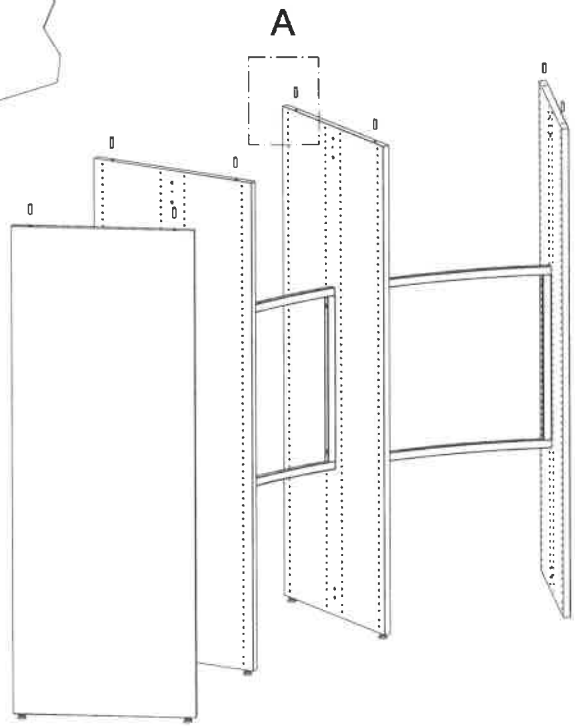

Sheet: 1 / 2

Assembly Guide

Lingo round, overlying top plate

WE ARE LIBRARY PEOPLE®

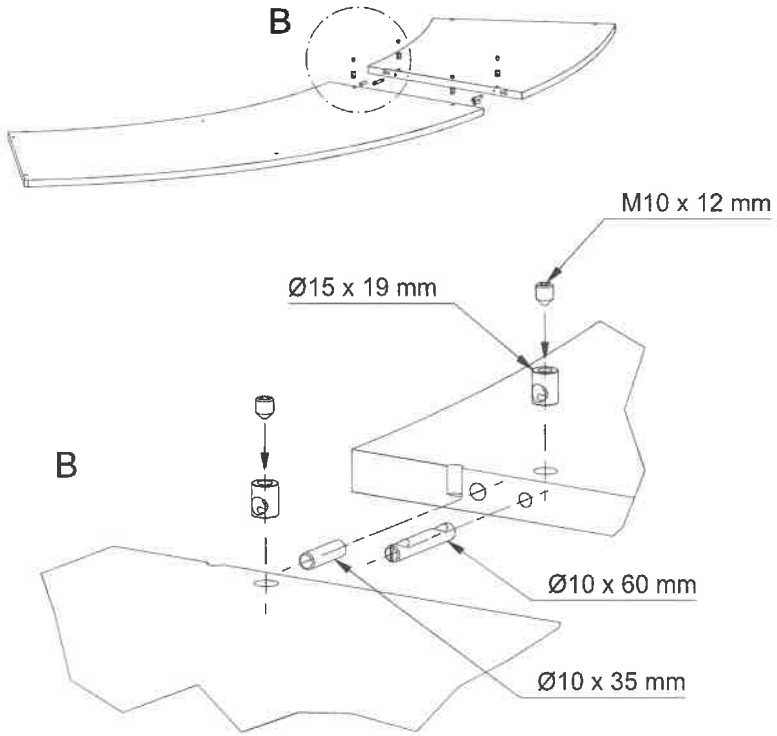

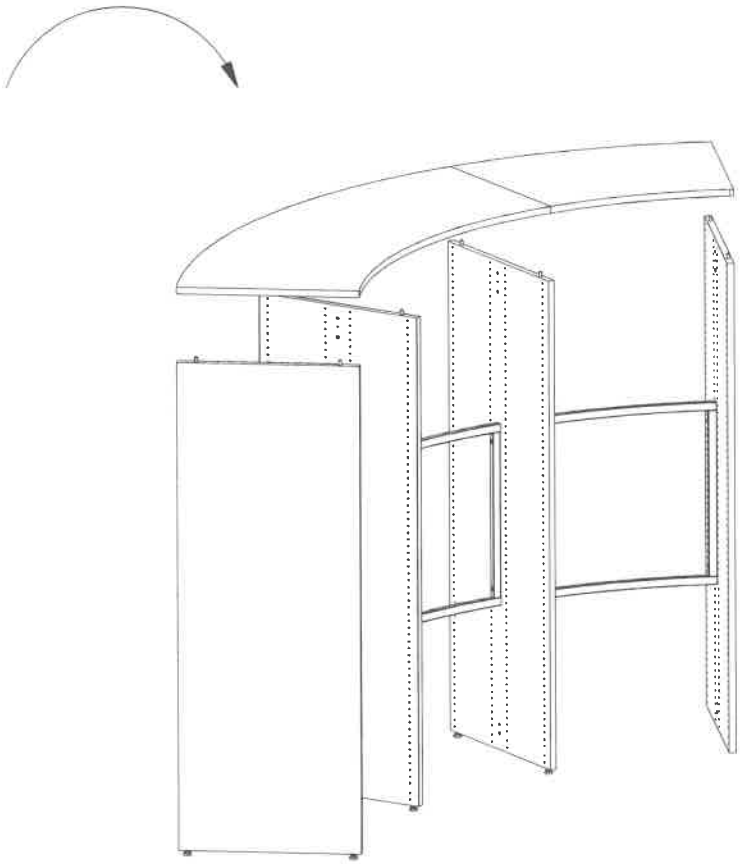

Sheet: 2 / 2

Assembly Guide

Lingo round steel plinth

WE ARE LIBRARY PEOPLE®

Round shape of the steel plinth appears during assembly

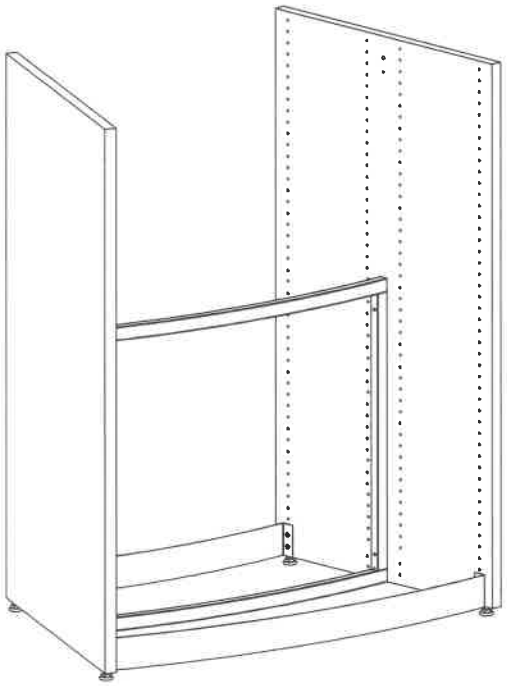

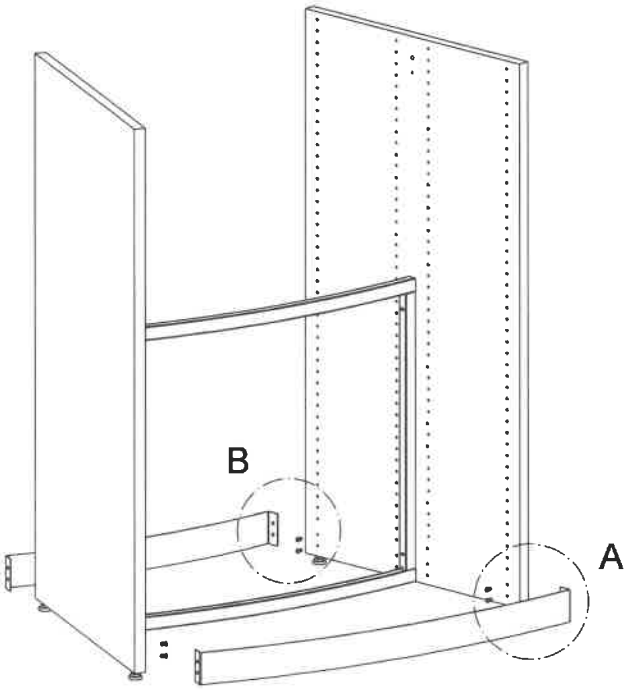

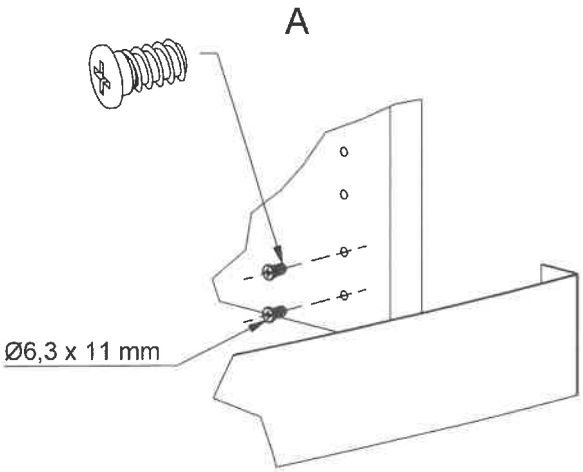

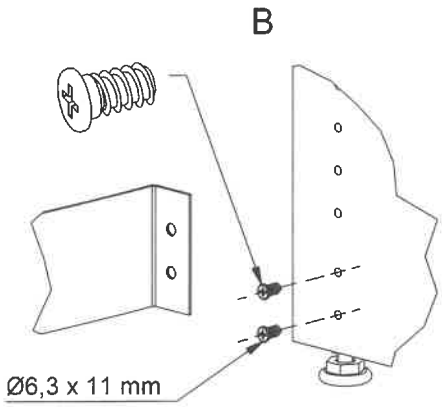

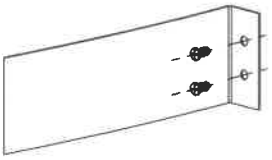

Sheet: 1 / 1

Assembly Guide

Lingo round, steel back panels

WE ARE LIBRARY PEOPLE®

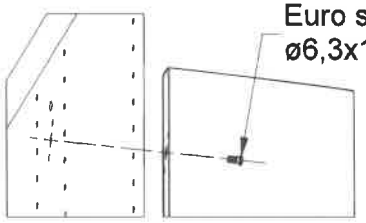

A

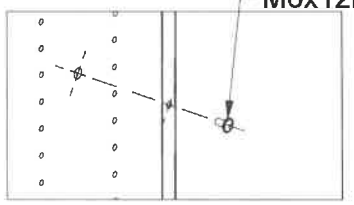

B

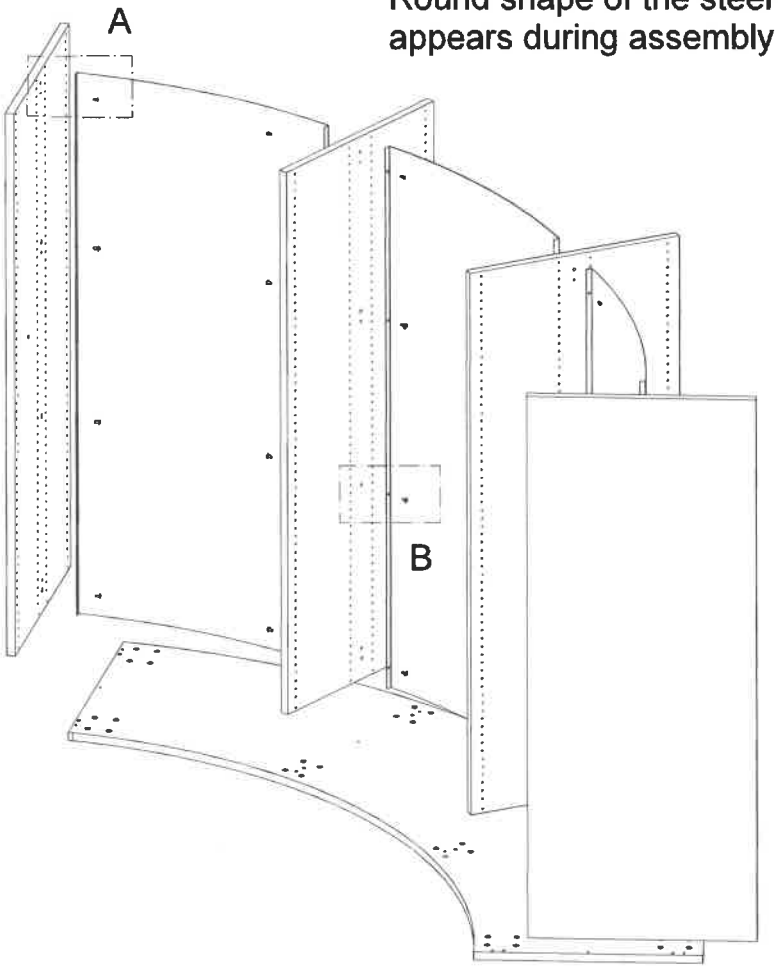

Round shape of the steel back panel appears during assembly

A

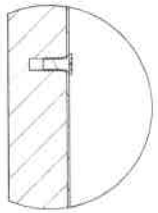

BB

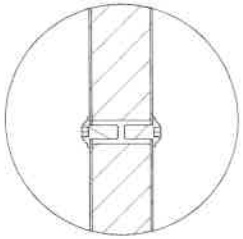

Sheet: 1 / 1

Assembly Guide

Lingo round, steel back panels

WE ARE LIBRARY PEOPLE®

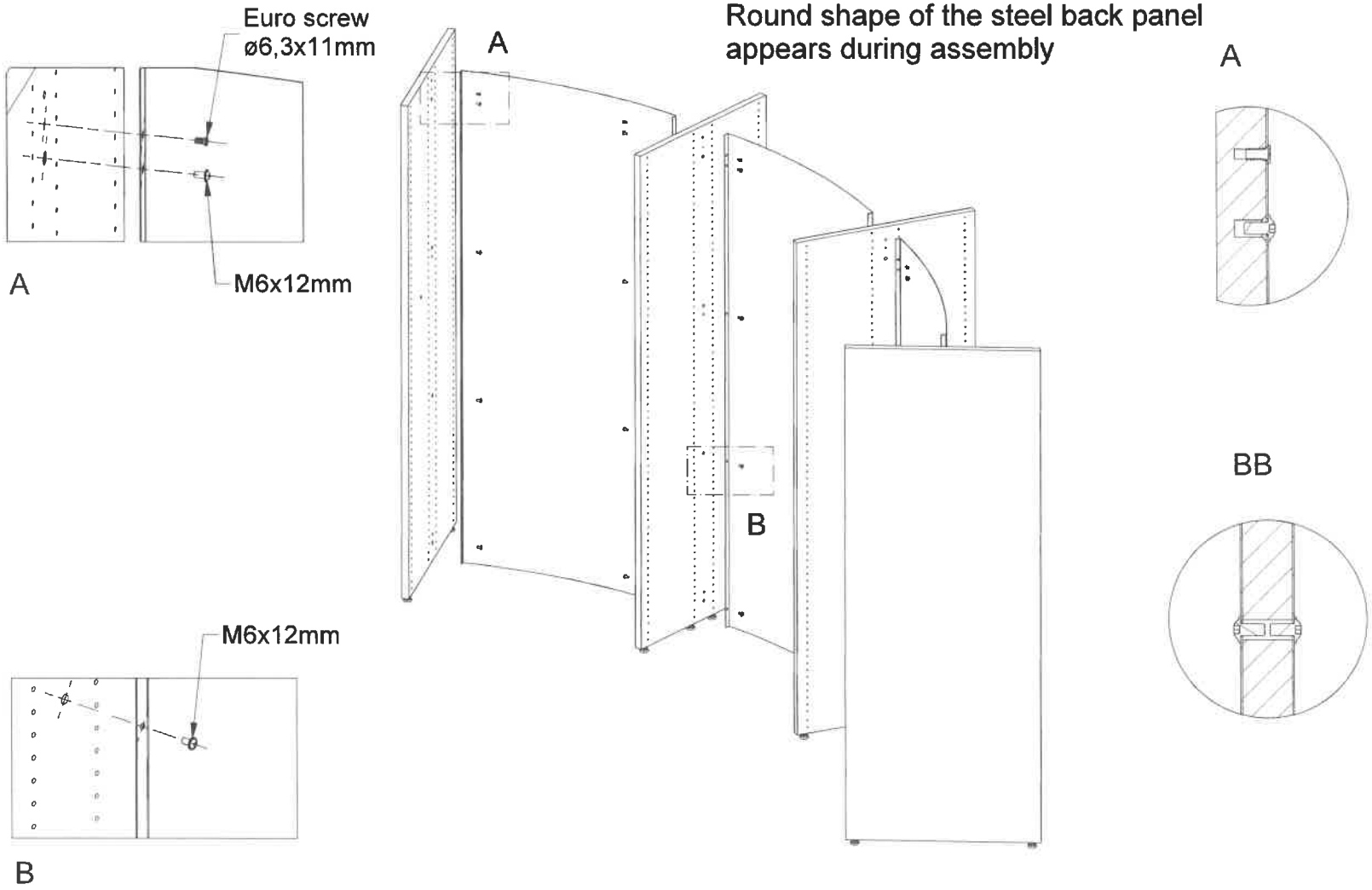

Sheet: 1 / 1

Assembly Guide

Lingo round, steel back frames

WE ARE LIBRARY PEOPLE®

Lingo round shelving H<142 cm, double

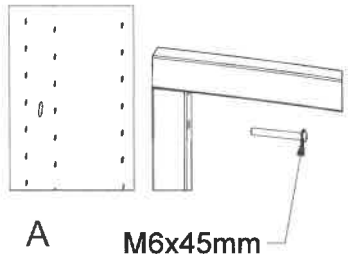

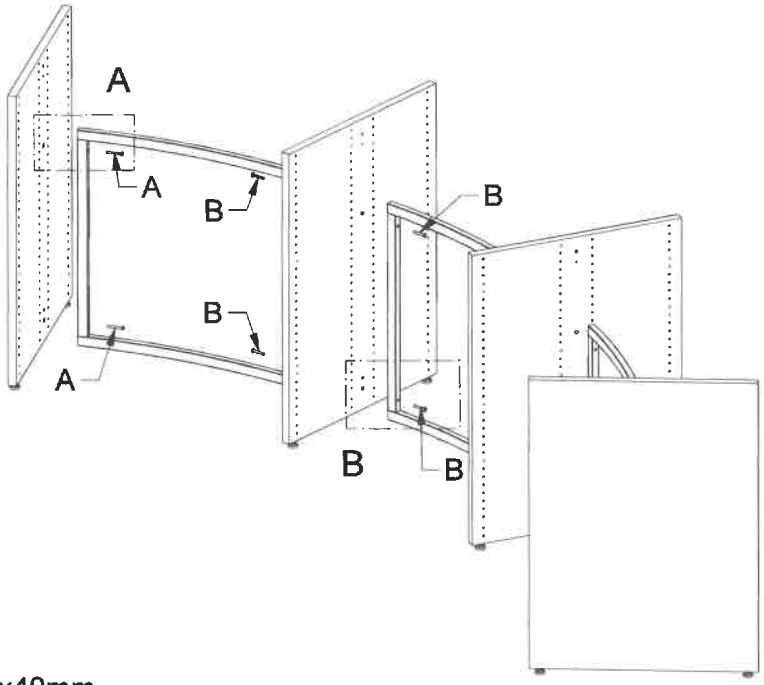

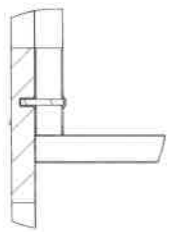

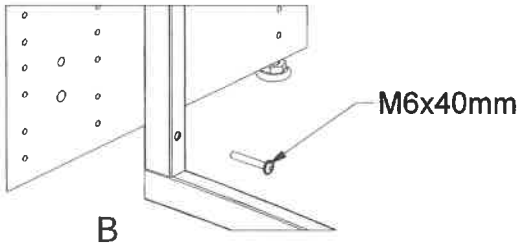

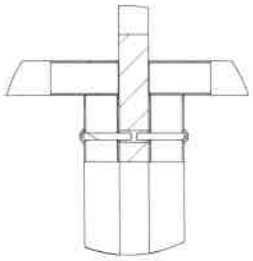

Sheet: 1 / 2

Assembly Guide

Lingo round, steel back frames

WE ARE LIBRARY PEOPLE®

Lingo round shelving H>142 cm, double

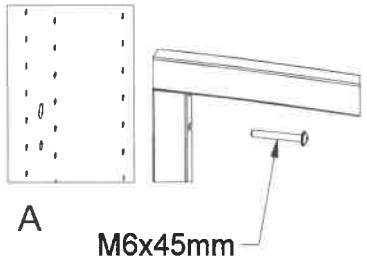

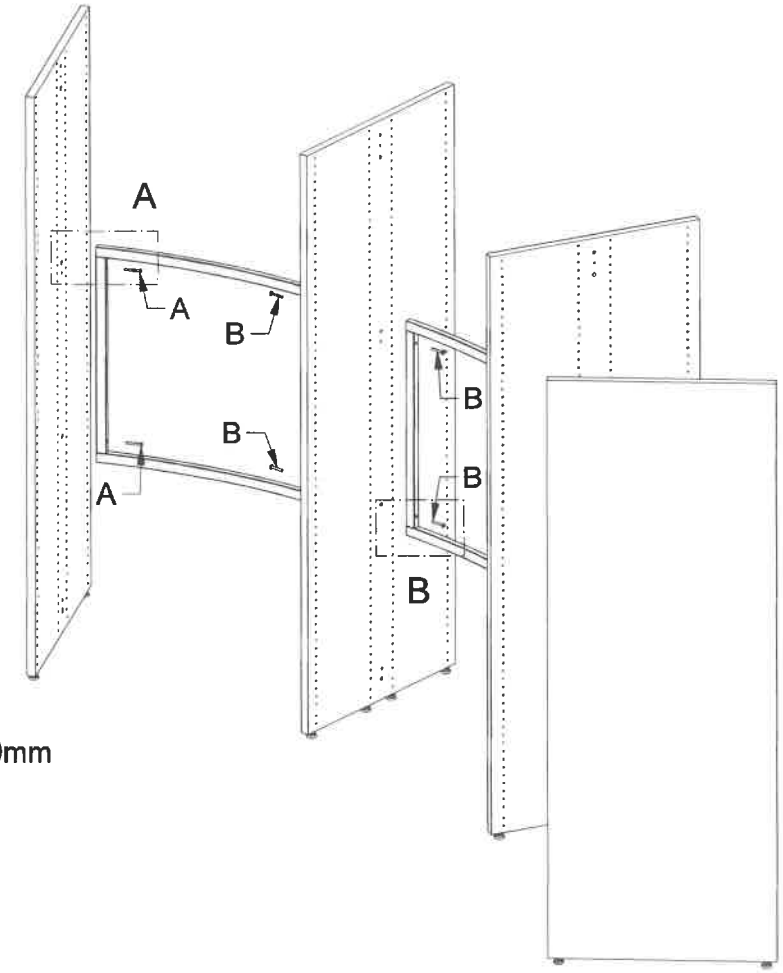

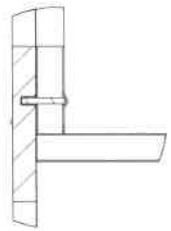

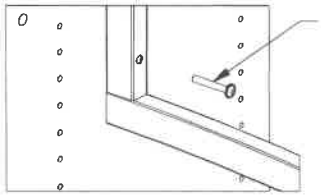

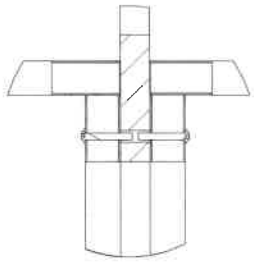

Sheet: 2 / 2

REVISION HISTORY			
REV	DESCRIPTION	DATE	APPROVED
-	First release	23-01-2023	MLU

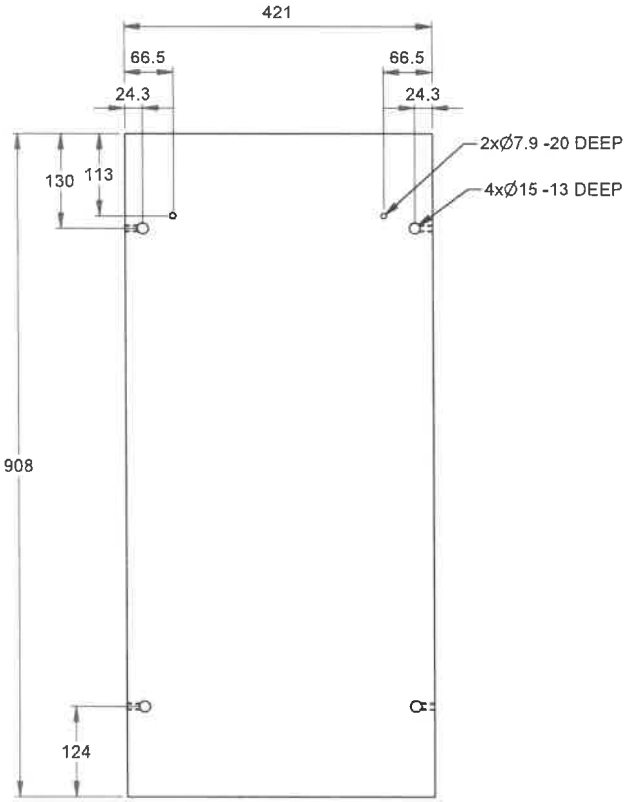

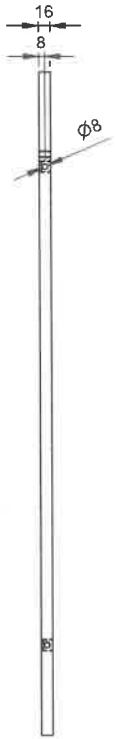

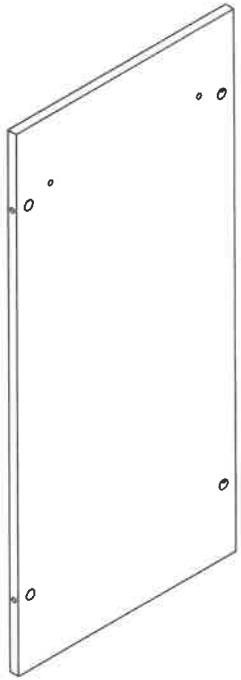

All Corners and edges - R1mm

Designer MLU	Scale 1 : 7	Description Back plate Booktrolley Halland
Creation Date 23-01-2023	Paper Size A3	
Weight 6,03 kg	Tol. ± 0,2	Material Painted, melamine or veneered
	File Number E421504	
BCI Eurobib direct	Confidential: Proberty of BCI A/S. Not to be handed over to, copied or used by third part. Two- or three dimensional reproduction of contents to be authorized by BCI A/S.	Drawing Number -